GS7R/P - Lincat Silverlink 600 Propane Gas Counter-top Griddle - Half-Ribbed Plate - W 750 mm - 8.0 kW

Whether you're cooking eggs, bacon, burgers or vegetables, the versatile Silverlink 600 Gas Griddle won't let you down.

- Flexibility of a half smooth, half ribbed plate to give attractive branding lines to your food whilst being able to cook eggs on the smooth half of the plate. 12 mm thick machined steel plate providing even heat distribution and an easy to clean surface
- Thermostatically controlled to give accurate temperatures during the cooking process for consistent results
- Two separately controlled heat zones give you the option of operating either zone independently to provide a smaller cooking area during quiet periods as well as offering versatility when cooking two separate meals simultaneously
- The plate is fully welded into the frame to prevent leaks and places where food and carbon can build up
- Front mounted control for easy of use during cooking
- Piezo ignition for easy lighting of the burners
- Flame failure device for maximum safety

Specifications

Summary

Brand	Lincat
Range	Silverlink 600
Power Type	Gas
Gas Type	Propane Gas
Unit Type	Counter-top
Available in UK Only	No
UK Warranty	2 Years Parts and Labour Warranty
Export Warranty	Contact your local dealer
GTIN	5056105104988

Power and Performance

BTU per Hour	27,296
Total Power kW	8.0
Cooking Area (Width x Depth) mm	712 x 405
Temperature Control	Mechanical

Key Specifications

Number of Heat Zones	2
Grill Plate Surface Type	Half-ribbed
Grill Plate Material	Steel

Capacity

Product Output per Hour	180 x 115g [4oz] burgers [frozen], 140 x 225g [8oz

Weights and Dimensions

Unit Height (External) mm	415
Unit Width (External) mm	750
Unit Depth (External) mm	650
Net Weight Kg	54

Supply Connections

Requires Installation	Yes
Requires Electrical Supply	No
Gas Connection BSP	1/2"
Gas Consumption at full rate Propane m³ per Hour	0.57
Gas Pressure Propane mbar	25.0
Total heat input at full rate Propane kW	8.0
Total heat input at full rate Propane BTU per hour	25,600

Shipping

Packed Weight Kg	69.9
Packed Height cm	63.5
Packed Width cm	85.5
Packed Depth cm	70

Available Accessories

CH01	Caterflex Hose 1/2" - 1 Metre - for use with units up to 66,000 BTU
CH02	Caterflex Hose 1/2" - 1.5 Metre - for use with units up to 56,000 BTU
CN7	Lincat Silverlink 600 Free-standing Ambient Open-Top Pedestal without Doors - W 750 mm
SB7	750 GRIDDLE SPLASHB
SLS7	Lincat Silverlink 600 Free-standing Floor Stand - for units W 750 mm

Technical Picture

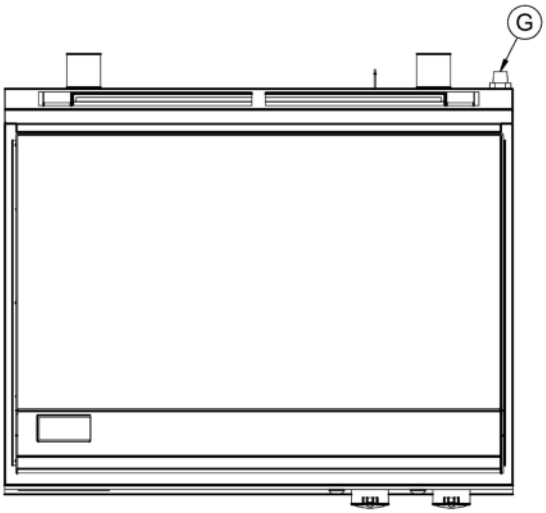

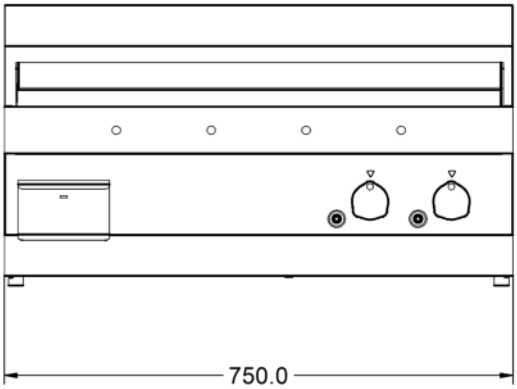

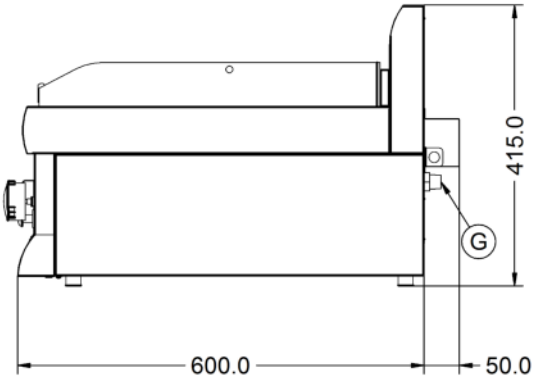

Lincat Limited

Whisby Road,

Lincoln, LN6 3QZ,

United Kingdom

Company No: 2175448

A member company of

THE MIDDLEBY CORPORATION

Customer Care

Tel: +44 1522 875500

Email: care@lincat.co.uk

Export Customers

Tel: +44 1522 503250

Email: export@lincat.co.uk

Opening Hours

Monday – Friday:

8.30am - 5pm