F52/510 - IMC Vulture 525 In-tabling Food Waste Disposer - 1 Phase [air break] - W 330 mm - 0.5 kW

Reliable, efficient, safe and easy to operate, the compact 525 Waste Disposer allows operators to quickly and effectively remove waste, to create a safer and cleaner kitchen.

- Fast and efficient disposal of up to 200kg of food waste per hour.
- Handles up to 400 covers per sitting - ideal for small to medium kitchens.
- For soft waste (plate waste, vegetables and peelings, meat and fish scraps).
- Compact design allows unit to be table-mounted, for quick and easy loading.
- Manually reversible motor to extend operational life.
- Comes with rubber housing to minimise noise.
- With class A airbreak kit - recommended when connecting to a mains water supply.
- Suitable for small to medium kitchens with single-phase power supply.

Specifications

Summary

Brand	IMC
Range	Vulture
Series	500 Series
Power Type	Electric
Unit Type	Welded into tabling
Available in UK Only	No
UK Warranty	2 Years Parts and Labour Warranty
Export Warranty	Contact your local dealer
Mounting	In-tabling
GTIN	5056105199496

Power and Performance

Total Power kW	0.55
HP	0.75
IP Rating	IP55

Key Specifications

Operator Safety	Interlocks
WRAS Approved	WRAS Compliant
Airbreak	Yes

Capacity

Type of Waste	Soft waste
Covers Per Sitting	400
Capacity Kg per Hour	200

Weights and Dimensions

Unit Height (External) mm	760
Unit Width (External) mm	330
Unit Depth (External) mm	355
Net Weight Kg	19.5

Supply Connections

Requires Installation	Yes
Requires Electrical Supply	Yes
UK 3 Pin Plug	No
Requires Hardwiring	Yes
Electrical Supply Rating Watts	550
Single Phase Amps	5.2
Single Phase Voltage	230
Water Supplied From	Mains or storage cistern
Water Connection Pressure Bar	0.4
Drain Connection	1.5" rubber housing
Water Connection	15mm

Shipping

Packed Weight Kg	22
Packed Height cm	77
Packed Width cm	40
Packed Depth cm	50

Available Options

WATER FLOW CONTROL

VS354	525 WATER FLOW CONTROL

Technical Picture

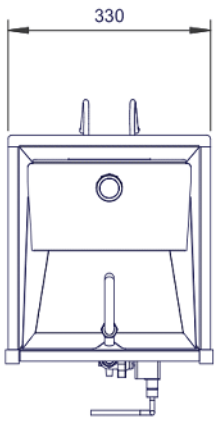

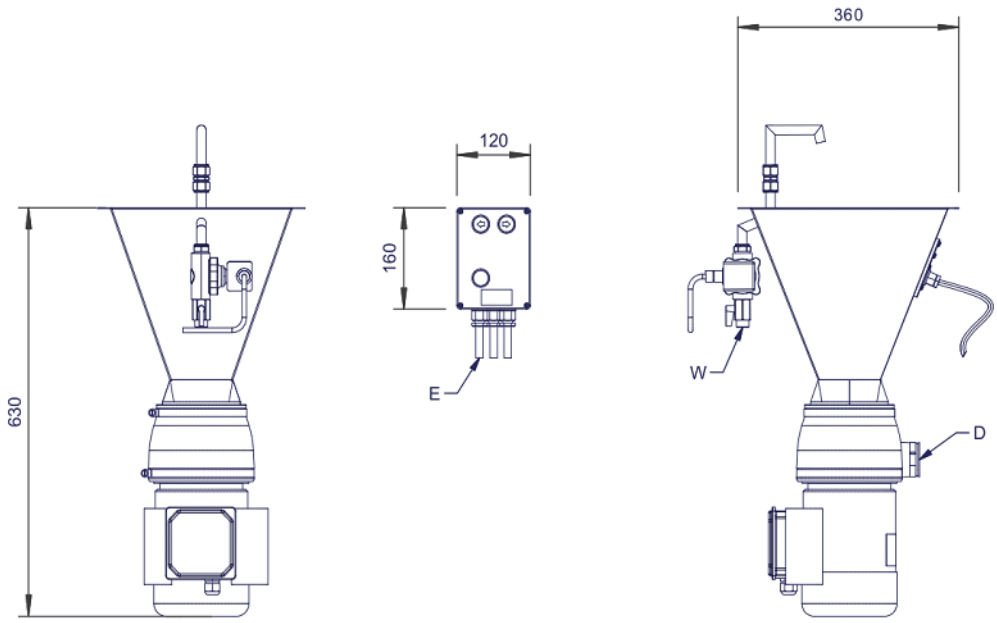

Lincat Limited

Whisby Road,

Lincoln, LN6 3QZ,

United Kingdom

Company No: 2175448

Customer Care

Tel: +44 1522 875500

Email: care@lincat.co.uk

Export Customers

Tel: +44 1522 503250

Email: export@lincat.co.uk

Opening Hours

Monday – Friday:

8.30am - 5pm

A member company of

THE MIDDLEBY CORPORATION